ERZIA
DATASHEET

High Power Amplifier

ERZ-HPA-0030-0600-46

Main Features:

- Frequency Range: 300 to 6000 MHz.
- Typical values: Pout 46 dBm, Gain 40 dB
- RF connectors (I/O): SMA Female
- DSUB type connector for DC & Control
- Several mounting options
- Nickel coating in aluminum housing
- Hi-reliability and dedicated screening/ environmental tests available under request

ERZ-HPA-0030-0600-46

The ERZ-HPA-0030-0600-46 is a High Power Amplifier providing an output power of 46 dBm and a gain of 40 dB. The compact size and modularity makes it ideal for a wide range of applications.

Typical applications:

- Industrial / Laboratory
- Satcom / Telecom
- Space / Aerospace

PRELIMINARY

Performance

Parameter	Min	Typ	Max	Unit
Frequency Range	0.3	-	6	GHz
Output Power (Psat)	44.5	46	-	dBm
Small Signal Gain	45	-	-	dB
Gain Flatness	-	+/-2	-	dB
Noise Figure	-	7	-	dB
VSWR input	-	-	2.0:1	-
VSWR output	-	-	3.0:1	-
DC Voltage	18	24	36	V
Power Consumption @ Psat	-	250	300	W
RF Connectors	SMA Female IN/OUT			-

Specifications at a case temperature of 25°C

Absolute Maximum Ratings

Condition	Value
DC Voltage	+ 36 VDC
Maximum Input Power (CW)	+13 dBm
Operation temperature (at case)	-40 to 70 °C
Storage temperature	-55 to 125 °C

- Stress above these ratings may cause permanent damage to the device.
- It is final user responsibility to maintain the amplifier within the specified ranges.

Environmental Specifications (By Design)

Operating Temperature:	-40 to +70 °C	(MIL-STD-810F, method 520.2)
Storage Temperature:	-55 to 125 °C	(MIL-STD-810F, method 520.2)
Vibration:	8g rms	(MIL-STD-810F, method 514.5)
Shock:	20g,11ms,saw-tooth	(MIL-STD-810F, method 516.5)
Acceleration:	15g	(MIL-STD-810F, method 513.5)

PRELIMINARY

RoHS & REACH Compliance

This part is compliant with EU 2011/65/UE RoHS (Restrictions on the Use of Certain Hazardous Substances in Electrical and Electronic Equipment) and REACH (Registration, Evaluation, Authorization and restriction of Chemical substances) directives.

Typical Psat @ 25°C

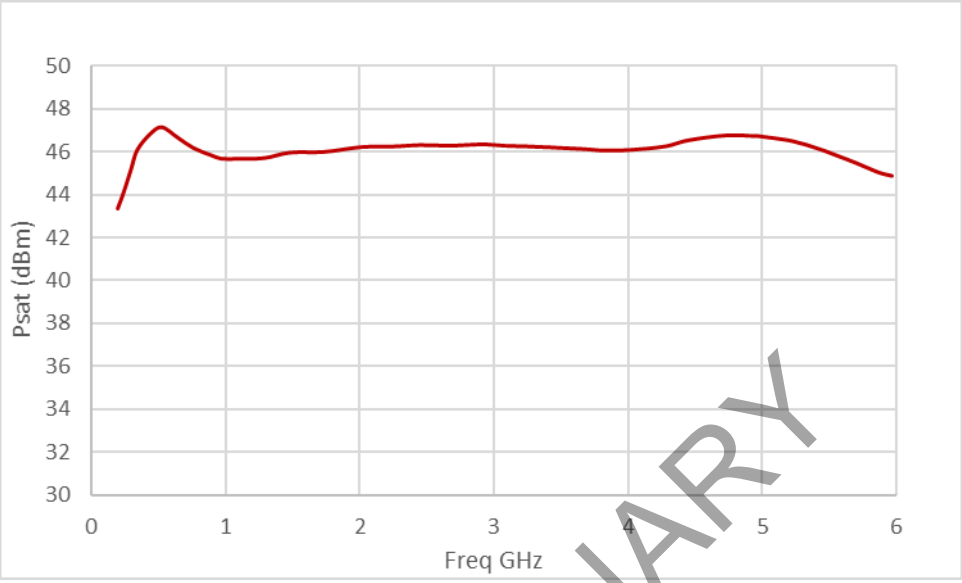

DC & Control Interface

PIN	LABEL	SIGNAL	DESCRIPTION
1	VCC	+24V Power Source	Power Supply
2	VCC	+24V Power Source	Power Supply
3	GND	Ground	Ground
4	EN	TTL Enable	OFF (0V to 0.8V); ON (2V to 5.5V);
5	TEMP	Temperature Monitor	Vo = −11.69 mV/°C × T + 1.8663 V
6	PGND	Power Ground	Power Ground
7	PGND	Power Ground	Power Ground
8	GND	Ground	Ground
9	I_SEN	Current Sense	Vo= 0.1V/A

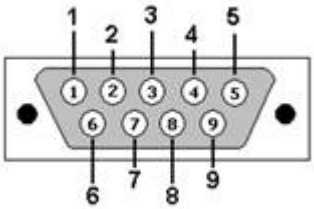

Figure 8: D-sub 9 Connector (Front view)

PRELIMINARY

Mechanics and Housing

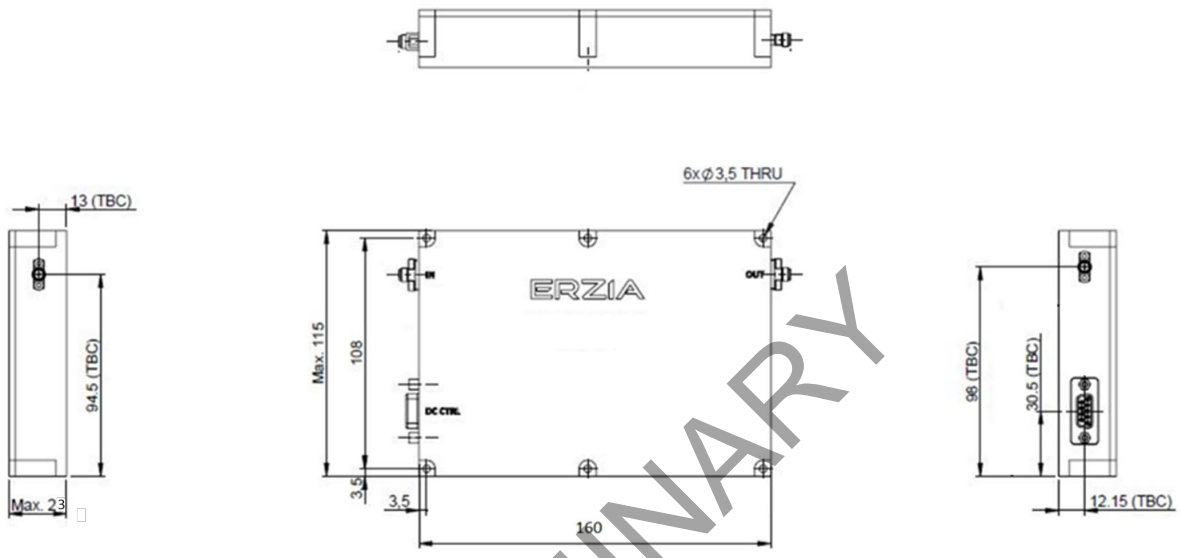

PRELIMINARY

Parameter	Value
Size	160x115x23 mm
Weight	800 grams ±10%
RF Input Connector	SMA Female
RF Output Connector	SMA Female
DC & Control Connector	Dsub9

Documentation and Test Reports

All modules are at least delivered with: Electrical Test Report, Certificate of Conformance, Certificate of Acceptance and Origin. Optionally, units can be environmentally tested (temperature, vibration…).

Option (HS): Heat Sink

A heat sink (HS) can be provided to allow the operation of Power Amplifiers. Please note that most power amplifiers need heat sink or appropriate heat dissipation strategy.

Space / Hi-Rel Usage

Most of ERZIA´s products are based on rad-hard technologies and can be manufactured and integrated according to MIL / ECSS or specific hi-rel standard-screening for space, aeronautics, or specific hi-reliability usage.

Customization and Extended Performances

ERZIA can fully design or adapt one of the existing RF amplifiers designs according to your specifications. Please contact us for additional information.

Model Number Codification

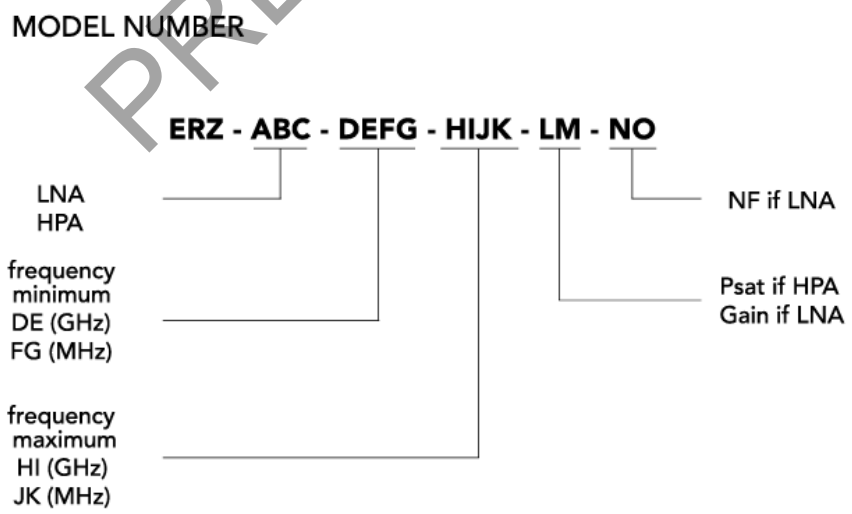

PRELIMINARY

ERZIA

PRELIMINARY

20261019_rev1.3

Copyright © 2023 ERZIA Technologies. All rights reserved. This information is commercial and indicative, subject to change without notice

Tel: +34 942 29 13 42 sales@erzia.com www.erzia.com